*CCAMLR Science*, Vol. 12 (2005): 195–205

# SHORT NOTE

## SEAL MITIGATION MEASURES ON TRAWL VESSELS FISHING FOR KRILL IN CCAMLR SUBAREA 48.3

J. Hooper✉, J.M. Clark, C. Charman and D. Agnew
Marine Resources Assessment Group Ltd
18 Queen Street, London W1J 5PN
United Kingdom
Email – j.hooper@mrag.co.uk

Abstract

At the 2004 meeting of the Working Group on Ecosystem Monitoring and Management (WG-EMM) in Siena, Italy, the UK reported on the by-catch of fur seals (*Arctocephalus gazella*) in the krill fishery around South Georgia, and on mitigation methods that were being developed and deployed to avoid fur seal deaths in the fishery. WG-EMM requested that the UK provide further details of the methods employed for consideration by the ad hoc Working Group on Incidental Mortality Arising from Fishing (WG-IMAF). Three CCAMLR international scientific observers recorded mitigation measures for fur seal entanglements on krill vessels fishing around South Georgia in the 2004 fishing season. The measures implemented were based on four approaches: physical barrier, barrier plus escape hatch, manufactured seal-exclusion devices and gear configuration. Those vessels initially without mitigation measures were able to introduce them without further cost and minimal disruption to fishing activity during the season. These approaches, aimed at reducing seal entanglements, are similar to the two systems implemented by Japanese vessels during the 2003 krill fishing season around South Georgia (Japan Deep Sea Trawlers Association, 2004).

Résumé

Lors de la réunion du Groupe de travail sur le contrôle et la gestion de l'écosystème (WG-EMM) qui s'est déroulée en 2004 à Sienne (Italie), le Royaume-Uni a fait un compte rendu sur la capture accidentelle des otaries (*Arctocephalus gazella*) dans la pêcherie de krill des environs de la Géorgie du Sud et sur la mise au point et l'utilisation de méthodes d'atténuation visant à éviter la mort de ces animaux dans cette pêcherie. Le WG-EMM a demandé au Royaume-Uni de soumettre de plus amples détails sur les méthodes employées pour examen par le Groupe de travail *ad hoc* sur la mortalité accidentelle liée à la pêche (WG-IMAF). Trois observateurs scientifiques internationaux de la CCAMLR présents sur des navires de pêche au krill autour de la Géorgie du Sud pendant la saison de pêche 2004 ont relevé des informations sur les mesures d'atténuation de l'enchevêtrement d'otaries dans des filets. Les mesures mises en place reposent sur quatre approches : barrière physique, barrière avec point de sortie, dispositif manufacturé d'exclusion des otaries et configuration de l'engin. Ces navires qui, au départ, ne disposaient d'aucune mesure d'atténuation, ont pu les introduire durant la saison sans autres frais et avec un minimum de perturbations dans les activités de pêche. Ces approches, visant à réduire l'enchevêtrement d'otaries dans des filets, sont similaires aux deux systèmes mis en place par les navires japonais pendant la saison de pêche de 2003 autour de la Géorgie du Sud (Association des chalutiers hauturiers japonais, 2004).

Резюме

На совещании Рабочей группы по экосистемному мониторингу и управлению (WG-EMM) 2004 г., проходившем в Сиене (Италия), СК представило доклад о прилове морских котиков (*Arctocephalus gazella*) при промысле криля у Южной Георгии и о смягчающих мерах, разрабатываемых и применяемых в целях

избежания гибели морских котиков при этом промысле. WG-EMM попросила СК представить дополнительную информацию о применяемых методах для рассмотрения специальной Рабочей группой по побочной смертности, вызываемой промыслом (WG-IMAF). Три международных научных наблюдателя АНТКОМа регистрировали смягчающие меры, которые применялись для снижения количества запутавшихся морских котиков на крилевых судах, проводивших промысел вокруг Южной Георгии в промысловом сезоне 2004 г. Применяемые меры брали за основу четыре подхода: физическое препятствие, препятствие плюс спасательный люк, готовые устройства для удаления тюленей из сети и конструкцию снастей. Суда, которые сначала не применяли смягчающих мер, смогли ввести их без дополнительных расходов и с минимальным нарушением работы промысла в течение сезона. Эти подходы, направленные на сокращение числа запутываний тюленей, схожи с двумя системами, применявшимися японскими судами во время сезона промысла криля 2003 г. у Южной Георгии (Japan Deep Sea Trawlers Association, 2004).

Resumen

En la reunión del Grupo de Trabajo para el Seguimiento y Evaluación del Ecosistema (WG-EMM) celebrada en 2004 en Siena, Italia, el Reino Unido informó sobre la captura accidental de lobos finos (*Arctocephalus gazella*) en la pesquería de kril alrededor de Georgia del Sur, y sobre los métodos de mitigación que estaban siendo desarrollados y aplicados para prevenir la muerte de lobos finos en esta pesquería. El WG-EMM pidió al Reino Unido que brindara más detalles sobre los métodos empleados para que fueran considerados por el Grupo de Trabajo especial sobre la Mortalidad Incidental causada por la Pesca (WG-IMAF). Tres observadores científicos de la CCRVMA registraron el uso de medidas de mitigación para prevenir el enredo de lobos finos en los barcos de pesca de kril alrededor de Georgia del Sur durante la temporada de pesca de 2004. Las medidas aplicadas se basaron en cuatro enfoques: una barrera física, una barrera con una ventanilla de escape, dispositivos para excluir a los pinnípedos de la captura y configuración del arte. Aquellos barcos que en un principio no aplicaron medidas de mitigación pudieron introducirlas sin coste adicional y con un trastorno mínimo de las operaciones de pesca durante la temporada. Estos enfoques, dirigidos a reducir los enredos de lobos finos, son similares a los dos sistemas aplicados por los barcos japoneses durante la temporada de pesca de kril en 2003 alrededor de Georgia del Sur (Asociación de arrastreros de altura del Japón, 2004).

Keywords: seal entanglement, mitigation measures, trawlers, krill fishery, South Georgia, CCAMLR

## Introduction

At the 2004 meeting of the Working Group on Ecosystem Monitoring and Management (WG-EMM) in Siena, Italy, the UK reported on the by-catch of fur seals (*Arctocephalus gazella*) in the krill fishery around South Georgia, and on mitigation methods that were being developed and deployed to avoid fur seal deaths in the fishery. WG-EMM requested the UK to provide further details of the methods employed for consideration by the ad hoc Working Group on Incidental Mortality Arising from Fishing (WG-IMAF).

Krill vessels are required to submit operational data to CCAMLR, including fine-scale catch and effort data. The data submitted to CCAMLR by those krill vessels operating in South Georgia did not contain records of incidental seal mortalities. Incidents of seal capture and mortality were recorded by CCAMLR international scientific observers only.

During the 2004 fishing season, three observers were deployed by the UK and rotated among the fishing fleet depending on vessel availability. A total of six out of nine vessels were observed and any mitigation methods used were recorded. Observer coverage and mitigation measures are summarised in Table 1.

The mitigation measures implemented by Japanese vessels during the 2003 krill fishing season were illustrated in a paper submitted to CCAMLR (Japan Deep Sea Trawlers Association, 2004) and are extracted below.

## Mitigation measures

### *Atlantic Navigator*

The *Atlantic Navigator* was equipped with a seal-exclusion device (Figure 1 (DEFRA, 2003)). The device was positioned within the net and consisted

Table 1: Observer coverage during the 2004 krill fishery. VUT – Vanuatu; KOR – Republic of Korea; USA – United States of America; RUS – Russia; UKR – Ukraine; JPN – Japan; SLED – sea lion exclusion device.

| Vessel | Flag | Observer coverage | | Number of trawls | | Mitigation measure |
|---|---|---|---|---|---|---|
| | | On | Off | Total | Observed | |
| *Atlantic Navigator* | VUT | 22 Jun | 17 Jul | 15 | 13 | SLED device |
| *InSung Ho* | KOR | 11 Aug | 25 Aug | 103 | 95 | Mesh barrier |
| *Top Ocean* | USA | 20 Jun | 20 Jul | 199 | 169 | Mesh barrier and SLED device |
| *Esperanza*[1] | RUS | 23 Jul | 03 Aug | 22 | 22 | Gear mesh size[2] |
| *Konstruktor Koshkin* | UKR | 31 May | 19 Jun | 248 | 111 | None |
| *Nitaka Maru* | JPN | 05 Aug | 26 Aug | 209 | 156 | SLED device |

[1] All hauls were observed, and although no mitigation methods were put in place, no seals were seen being entangled. However, due to the way in which nets were emptied, the observer remarked that entanglements could have been taking place but were impossible to observe.

[2] No specific mitigation measures were deployed; however the panels of large mesh size at the mouth of the net provided a means of escape.

of a metal grid sloped at an angle to divert seals out through an escape panel. The device was fabricated and configured on board the vessel. Despite the device, seal entanglements were recorded for the first two trawls. As a result, the gear was modified by enlarging the hole and changing the orientation so the seals escaped through the floor of the net rather than the roof. After this modification, no further captures were reported.

The vessel is unusual in that it keeps the net at fishing depth for prolonged periods, and uses a pump to remove the krill. This means the number of shooting and hauling operations is reduced, which may also reduce the incidence of seal entanglement.

*InSung Ho*

A marine mammal mitigation measure was initially deployed by the *InSung Ho* between hauls 19 and 24 (12 and 13 August 2004). This device was constructed from 240 mm nylon mesh and positioned immediately anterior to the net. It acted as a barrier suspended over the mouth of the net (Figure 2).

The apex of the barrier was attached on either side where the headrope and groundrope connected to the warps. Two mesh planes, 44 m in width and 20 m in length, extended back to cover the mouth of the net, one situated above the headrope and one below the groundrope respectively. However, access to the net remained available at the flanks of the barrier because it was not closed or attached to the main net at any point. Apparently, the device also reduced catches resulting in its removal prior to trawl 25.

A modified barrier was deployed prior to haul 62 and was employed thereafter for the duration of the cruise (Figure 3).

This device was still constructed of 240 mm nylon mesh but was spliced into the perimeter of the net just posterior to the mouth. The improved design did not present any gaps through which the seals could gain access. The barrier extended back into the body of the net by approximately 20 m and functioned similar to a giant 'bag' (Figure 3). Only two subsequent seal entanglements occurred. A seal was discovered inside the 'bag' during trawls 72 and 95. In both cases the seal was released alive and unharmed.

*Top Ocean*

Two different nets were used by the *Top Ocean* during the trip. The only mitigation measure employed during hauls 1 to 81 was to change course once the trawl doors were recovered, closing the mouth of the net in an attempt to stop seals entering. However, this did not work reliably and often resulted in seals becoming trapped inside. Modifications were made to both nets to create a series of mesh barriers and escape openings, and these nets were deployed from trawl number 82 onwards.

The first net had an inclined mesh barrier spliced into the inside of the net located to guide seals upward towards an escape opening 0.5 m in diameter in the roof of the net (Figure 4, measure 1). It was constructed from 140 mm polypropylene mesh and was positioned immediately after the escape opening. This opening was later increased to 1 m to allow seals to escape more easily, and an additional

three 1.6 m mesh escape openings were positioned in the roof of the net (Figure 4, measure 2). The final modification was the introduction of a large mesh barrier (Figure 4, measure 3) measuring 162 $m^2$ (13.5 x 12 m), positioned 47 m from the mouth of the net.

The second net had a mesh funnel spliced into the inner panel (Figure 5) anterior to the codend to guide seals towards an escape opening 0.5 m in diameter in the roof of the net. The funnel was constructed from 240 mm nylon mesh and was located inside the 15 mm inner mesh liner and within the 140 mm mesh of the outside net (Figure 6, measure 1).

To improve its effectiveness, a large mesh barrier was also inserted 47 m from the mouth of the net measuring 162 $m^2$ (13.5 x 12 m). A 1.6 m mesh opening was placed in the roof of the net immediately in front of the barrier (Figure 6, measure 2) and the funnel and original escape opening removed.

The most successful measure was measure 3 on the first net. All other measures resulted in some reduction in by-catch, but not its elimination. Once the vessel had discovered that measure 3 was the most successful, measures 1 and 2 were removed from the first net and the second net was also configured with measure 3.

*Esperanza*

The *Esperanza* did not deploy any specific mitigation measures. However, the forward part of the roof of the net had three large mesh panels inserted into it of mesh size 16 m and a further 2 panels of mesh size 4 m (Figure 7). These appeared to allow the seals to escape alive and unharmed. Therefore no further measures were developed.

*Konstruktor Koshkin*

The arrangements for mitigation measures on the *Konstruktor Koshkin* were similar to those on the *Esperanza*, in that no specific mitigation measures were deployed. However, the front panels of the net were of a large mesh size and configured hexagonally, permitting seals to escape.

Japanese system

The net systems are referred to as NISSUI and MARUHA. The NISSUI system was installed in the nets used on the *Koyo Maru No. 8* (Figure 8).

The NISSUI system was developed by Nippon Suisan Kaisha Ltd. A section of roof panel netting, measuring 6 x 4 m is removed, and replaced with a panel of a larger mesh size of 1.6 x 1.6 m, thus permitting the seals to escape.

The seals are deflected towards the panel by insertion of a section of net constructed from 300 mm mesh and configured obliquely, guiding the seals to the escape panels. The 300 mm mesh allows the krill to pass through to the codend.

The MARUHA system was developed by Maruha Trawl Corporation and incorporated into nets used on the *Chiyo Maru No. 5*. An inner net is arranged within the body of the main net (Figure 9).

The initial section of the inner net had a mesh size of 200 mm, followed by a section of 150 mm. The inner net acted as an excluding device, preventing the seals from entering the codend. A panel with a single section of mesh, size 1.5 x 2.1 m, was located in the upper panel (Figure 9), providing a means of escape.

## Conclusion

In all cases the incidence of seal entanglements during the 2004 season was either eliminated or greatly reduced (Table 2).

Seal entanglements occurred in each of the two hauls conducted prior to alterations to the mitigation measures on the *Atlantic Navigator*. The vessel responded quickly to the seal entanglement problem by widening the escape panel and repositioning it to the belly of the net. These changes eliminated all further incidents.

Two types of mitigation measures were implemented on the *InSung Ho*. The second was more successful because it effectively formed a physical barrier to the mouth of the net and prevented seals from entering. The first left gaps that provided opportunities for seals to breach the barrier and forage within the net. When neither mitigation measure was used, seal entanglements were higher.

The introduction of mitigation measures on the *Top Ocean* successfully reduced entanglements. The most effective was a physical barrier to prevent seals from foraging deep within the nets.

Table 2: Seal entanglements before and after application of mitigation measures. The values in brackets refer to the percentage of the total number of entanglements for that vessel.

| Vessel | Entanglements before application | | Entanglements after application | |
|---|---|---|---|---|
| | Number (*n*) | Rate/trawl | Number (*n*) | Rate/trawl |
| *Atlantic Navigator* | 11 (100%) | 5.5 | 0 (0%) | 0.0 |
| *InSung Ho* | 76 (92%) | 1.38 | 7 (8%) | 0.15 |
| *Top Ocean* | 157 (84%) | 1.94 | 28 (16%) | 0.23 |
| *Konstruktor Koshkin* | na | 0.0 | na | 0.0 |
| *Esperanza* | na | 0.0 | na | 0.0 |

A combination of an escape panel and a mesh barrier were used on the *Nitaka Maru* for the duration of fishing operations. Seal entanglements only occurred when the mesh barrier was breached. Therefore it is essential that the integrity of the barrier is maintained.

Apart from the Japanese and Ukrainian vessels, the measures were introduced on an ad hoc basis at relatively little cost and disruption to the fishery.

The range of measures can be categorised into four approaches. These are:

(i) physical barriers (panels of netting) excluding seals from entering the net;

(ii) physical barriers (panels of netting) positioned within the net accompanied by escape channels or openings;

(iii) manufactured seal-exclusion devices in front of the codend that are composed of a separator grill that deflects seals to an escape opening;

(iv) fishing gear configured with panels of a mesh size adequate to allow seals to escape.

The options available to fishers permit the selection of an adequate mitigation measure that is suitable for their budget and fishing strategy.

## Acknowledgements

The authors thank Mr T. Inoue of the Japan Deep Sea Trawlers Association for his time and assistance discussing the mitigation methods used by the Japanese trawlers participating in the krill fishery in CCAMLR Subarea 48.3. Equally helpful was the contribution of Leonid Pshenichnov, who provided the net plans of the Ukrainian krill trawler *Konstruktor Koshkin*.

## References

DEFRA (Department for the Environment, Food and Rural Affairs). 2003. Adapted from the report: UK small cetacean bycatch response strategy. DEFRA Publications, London.

Japan Deep Sea Trawlers Association. 2004. Mitigation measures of fur seal entanglement by Japanese krill vessels. Document *WG-FSA-04/17*. CCAMLR Hobart, Australia.

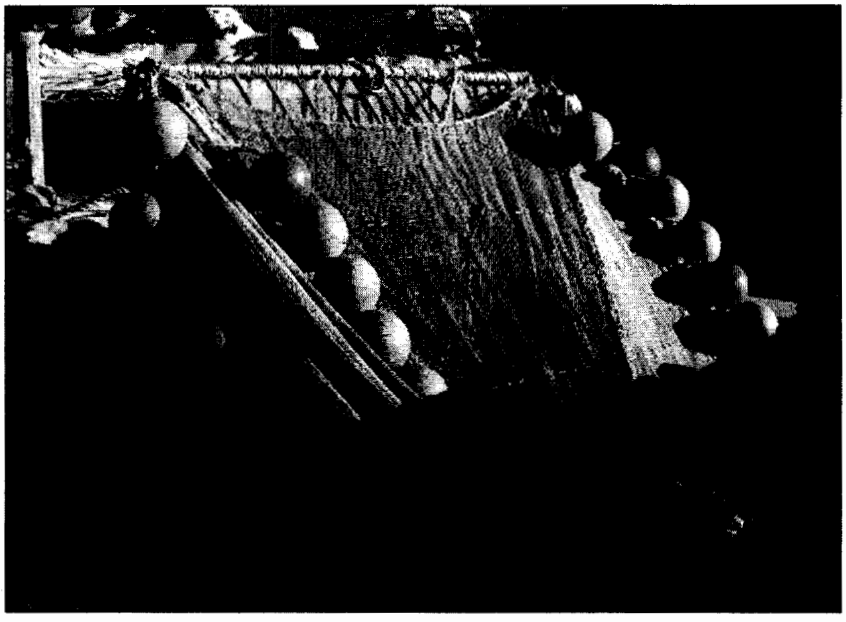

Figure 1: Seal-exclusion device on the *Atlantic Navigator*.

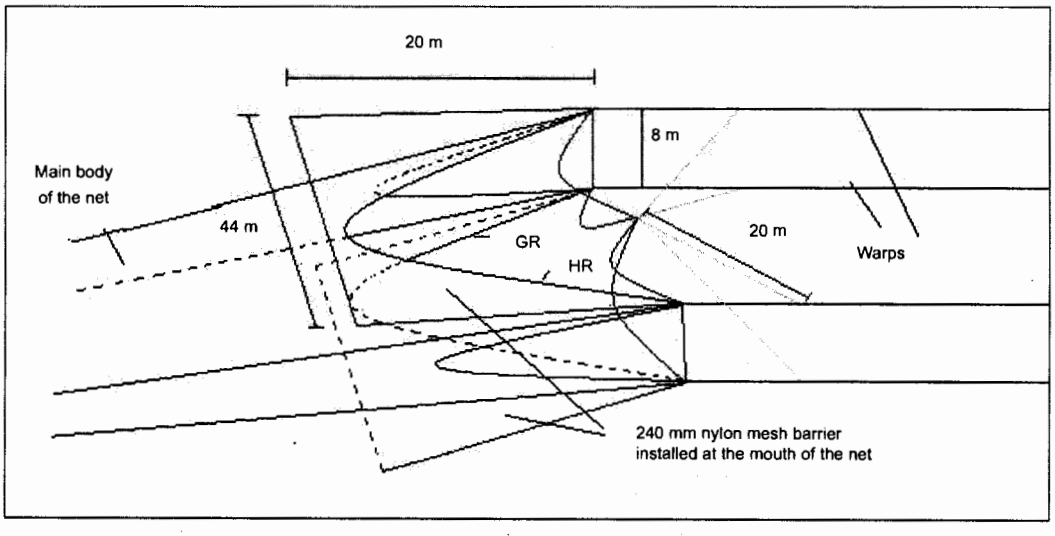


Figure 2: Mesh barrier on the *InSung Ho*. HR – headrope, GR – groundrope.

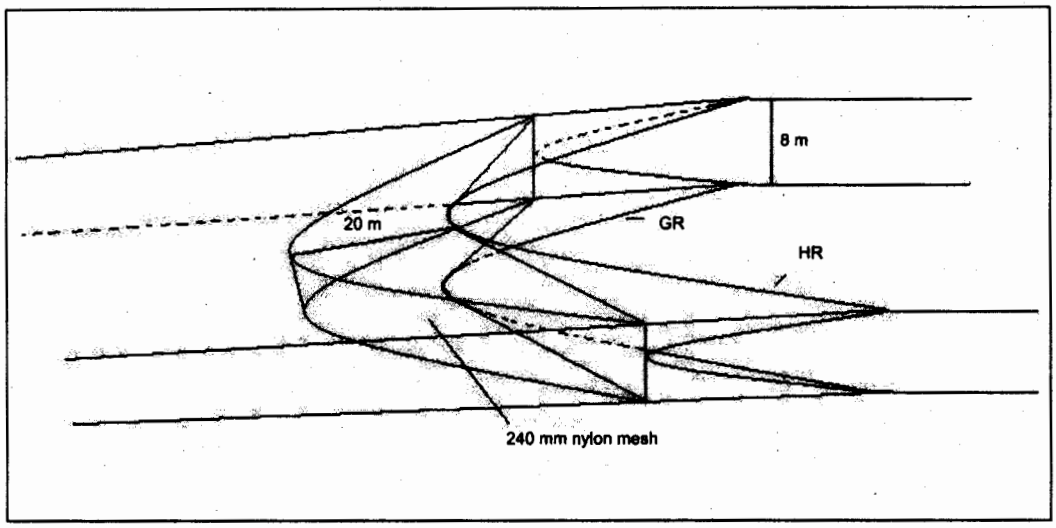


Figure 3: Modified mesh barrier deployed on the *InSung Ho*. HR – headrope, GR – groundrope.

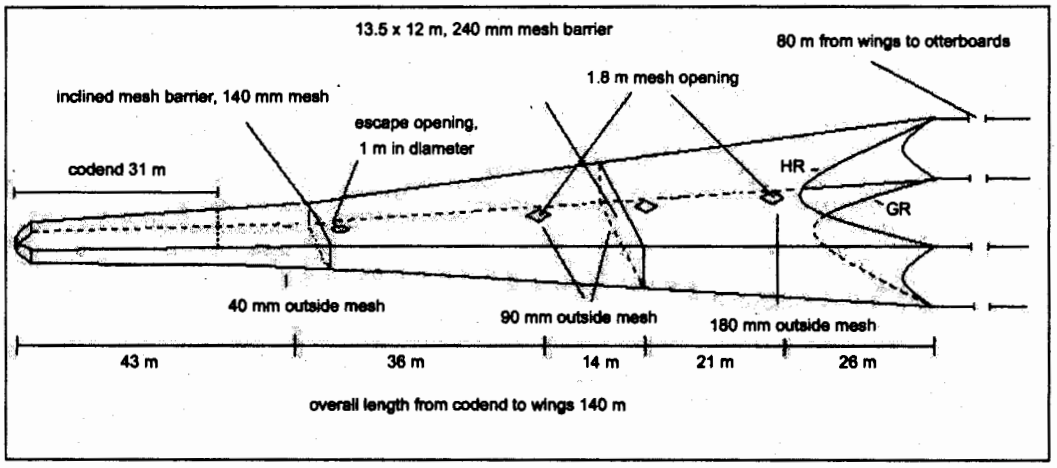


Figure 4: Mitigation measures of the first net deployed by the *Top Ocean*.

Figure 5: Mesh funnel spliced into the inner panel on the *Top Ocean*.

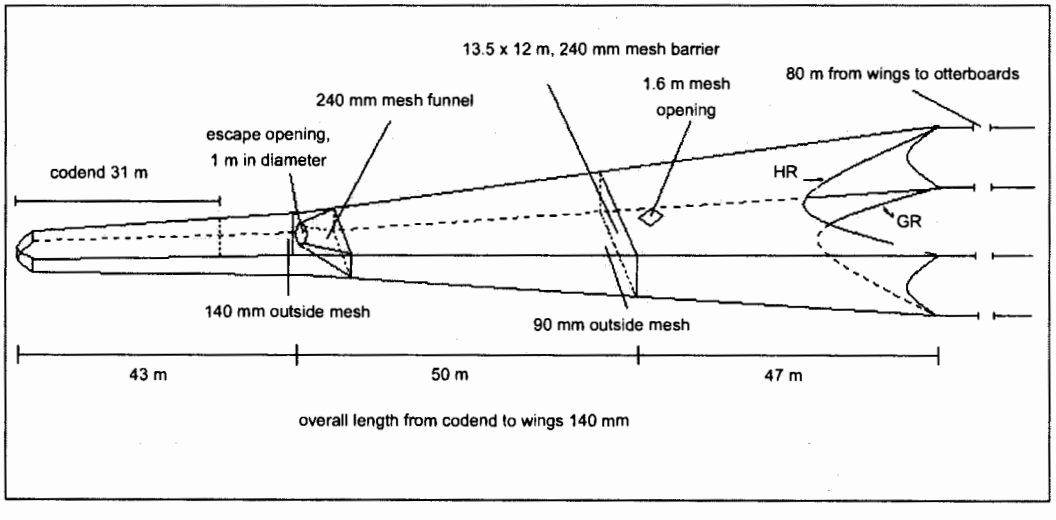


Figure 6: Mitigation measures of the second net deployed by *Top Ocean*. HR – headrope, GR – groundrope.

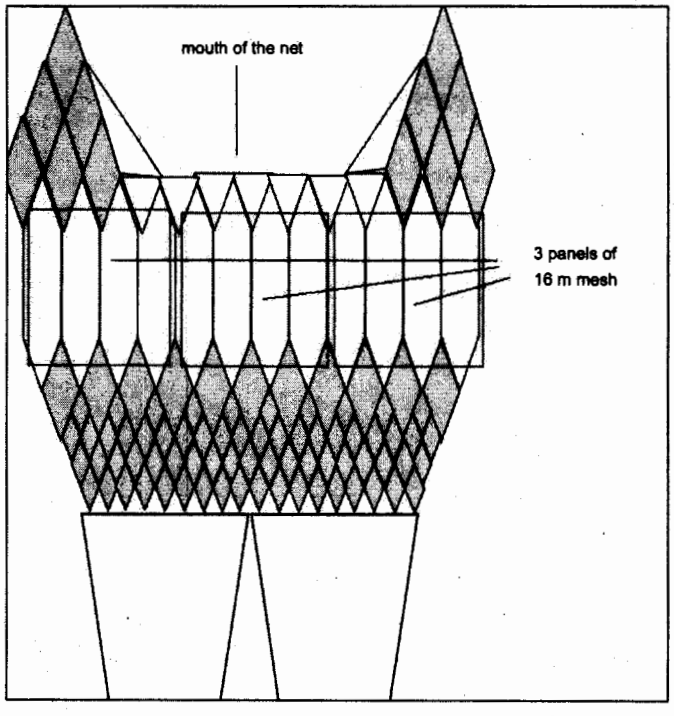


Figure 7: Net plan of the *Esperanza*.

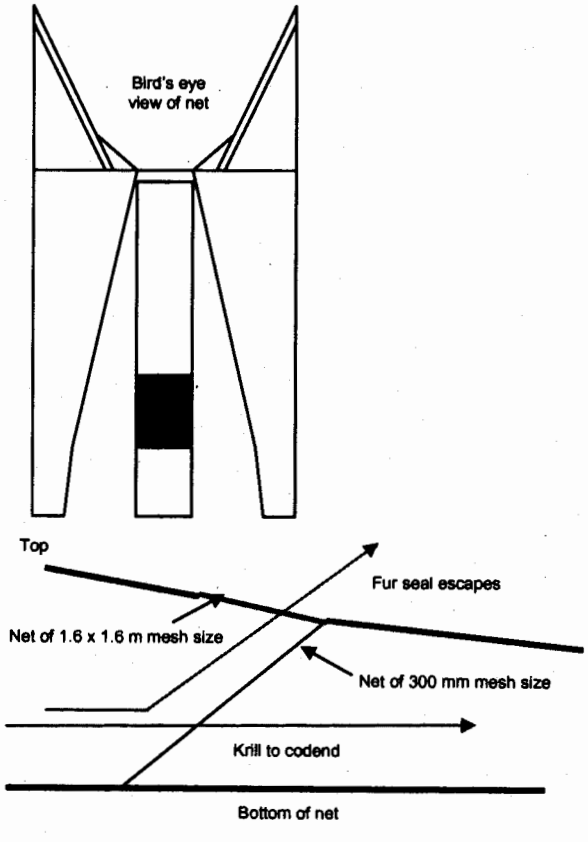


Figure 8: Net plan of the NISSUI system.

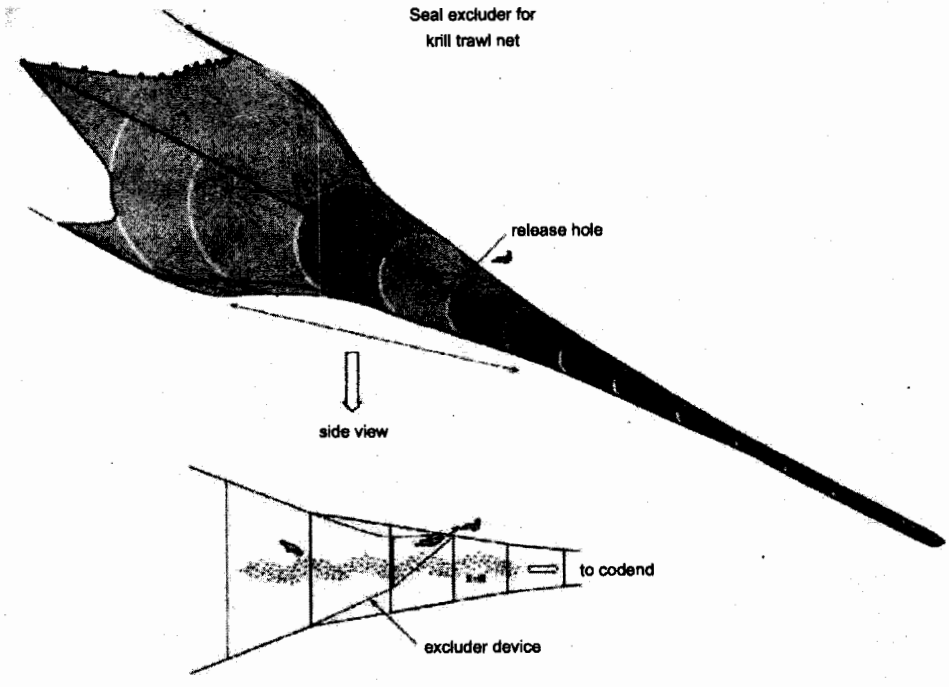


Figure 9: Net plan of the MARUHA system.

Liste des tableaux

Tableau 1: Observation lors des activités de pêche de 2004. VUT – Vanuatu; KOR – République de Corée; USA – Etats-Unis d'Amérique; RUS – Russie; UKR – Ukraine; JPN – Japon; SLED – dispositif d'exclusion des lions de mer.

Tableau 2: Enchevêtrement d'otaries dans des filets avant et après l'application des mesures d'atténuation. Les valeurs entre parenthèses correspondent au pourcentage du nombre total d'enchevêtrements pour ce navire.

Liste des figures

Figure 1: Dispositif d'exclusion des otaries sur l'*Atlantic Navigator*.

Figure 2: Filet barrière sur l'*InSung Ho*. HR – ralingue supérieure, GR – ralingue inférieure.

Figure 3: Filet barrière modifié déployé sur l'*InSung Ho*. HR – ralingue supérieure, GR – ralingue inférieure.

Figure 4: Mesures d'atténuation du premier filet déployé par le *Top Ocean*.

Figure 5: Filet en forme d'entonnoir inséré dans le panneau intérieur du *Top Ocean*.

Figure 6: Mesures d'atténuation du second filet déployé par le *Top Ocean*. HR – ralingue supérieure, GR – ralingue inférieure.

Figure 7: Plan du filet de l'*Esperanza*.

Figure 8: Plan du filet du système NISSUI.

Figure 9: Plan du filet du système MARUHA.

Список таблиц

Табл. 1: Охват наблюдателями во время промысла криля 2004 г. VUT – Вануату; KOR – Республика Корея; USA – США; RUS – Россия; UKR – Украина; JPN – Япония; SLED – устройство для удаления морских львов.

Табл. 2: Случаи запутывания тюленей до и после применения смягчающих мер. Значения в скобках относятся к доле от общего количества случаев запутывания на этом судне.

Список рисунков

Рис. 1: Устройство для удаления тюленей, судно *Atlantic Navigator*.

Рис. 2: Сетевая преграда, судно *InSung Ho*. HR – верхняя подбора, GR – грунтроп.

Рис. 3: Модифицированная сетевая преграда, применявшаяся на судне *InSung Ho*. HR – верхняя подбора, GR – грунтроп.

Рис. 4: Смягчающие меры на первом трале, использовавшемся судном *Top Ocean*.

Рис. 5: Сетная воронка, врезанная во внутреннюю пластину трала на судне *Top Ocean*.

Рис. 6: Смягчающие меры на втором трале, использовавшемся судном *Top Ocean*. HR – верхняя подбора, GR – грунтроп.

Рис. 7: Схема трала судна *Esperanza*.

Рис. 8: Схема трала системы NISSUI.

Рис. 9: Схема трала системы MARUHA.

Lista de las tablas

Tabla 1: Cobertura de observación en la pesquería de kril en 2004. VUT – Vanuatu; KOR – República de Corea; USA – Estados Unidos de América; RUS – Rusia; UKR – Ucrania; JPN – Japón; SLED – dispositivo de exclusión de lobos finos.

Tabla 2: Enredo de pinnípedos antes y después de la aplicación de medidas de mitigación. Los valores entre paréntesis indican el porcentaje del número total de enredos para ese barco.

Lista de las figuras

Figura 1: Dispositivo para la exclusión de pinnípedos utilizado por el *Atlantic Navigator*.

Figura 2: Malla protectora empleada por el *InSung Ho*. HR – relinga de corchos, GR – relinga de plomos.

Figura 3: Malla protectora con modificaciones empleada por el *InSung Ho*. HR – relinga de corchos, GR – relinga de plomos.

Figura 4: Medidas de mitigación aplicadas en la primera red empleada por el *Top Ocean*.

Figura 5: Malla en forma de embudo unida a la pieza interior de la red empleada por el *Top Ocean*.

Figura 6: Medidas de mitigación aplicadas en la segunda red empleada en el *Top Ocean*. HR – relinga de corchos, GR – relinga de plomos.

Figura 7: Diseño de la red del *Esperanza*.

Figura 8: Diseño de la red del sistema NISSUI.

Figura 9: Diseño de la red del sistema MARUHA.